International Journal of Engineering Research and General Science Volume 4, Issue 3, May-June, 2016
ISSN 2091-2730

Overcurrent and Earth fault Relay Coordination for Microgrids with Modern Numerical Relay Features

Dr.R.Muthu Kumar [1] and Mr.Vahab P [2]

[1]Associate Professor , Department of EEE, Shree Venkateshwara Hi-Tech Engineering College, Erode, India

[2]PG Scholar, ME (PSE),Department of EEE, Shree Venkateshwara Hi-Tech Engineering College, Erode, India

Abstract - Capability of Microgrids to operate in both grid connected mode and islanded mode results in drastic change in the fault current results in complicated protection requirements. This paper proposes a new approach for setting all overcurrent (OC) relays and Earth fault relays in substations, process industries with cogeneration, distribution system with Embedded Renewable Generation and micro grid using modern numerical relay features. This approach is more suitable where there is a drastic change in the fault current based on the network topology and configuration This technique is used in setting the OC relays of a IEEE 30 Bus system, Real time steel industry and a Microgrid system. There is a Significant reduction in fault clearing time which reduces the damage and enhance the stability. In addition it also prevent all the mal operation of relays and nuisance tripping.

Index Terms - Micro Grid, Relay Setting, Numerical Relays with Multiple settings, Adaptive setting, self-tuning relays, Cogeneration

I. INTRODUCTION

Conventionally Over Current (OC) relaysettings are provided based on full load current of power system components. Time Dial Setting (TDS) and Type of curve are chosen to ensure that the coordination with the downstream relays. This conventional procedure for setting the relays went well for a long time. However introduction of Embedded Renewable Generation, Cogeneration in plants in process industries and islanding from the grids, Introdcution of micro grids, Change in the Grid Topology etc. results in the drastic change in the fault current. This leads to problems like nuisance tripping of relays, improper coordination or longer time taken to operate the relays for a fault. Situation got worse in the continuous addition of renewable generation, most sophisticated grid islanding schemes, Energy efficient motors which draws high starting current, technological advancements in controlled switching for transformer and reactor to reduce the inrush current etc made the conventional of relay setting obsolete. These technological advancements along with new feature in the modern numerical relays provide a better platform to coordinate the relays to reduce the operating time of relay, prevent the nuisance tripping and ensure the coordination between the relays in all the grid topologies[1].

Overcurrent Relays utilized in power systems protection as economical protective devices. Overcurrent relays are used as main protection devices in Low Voltage Radial systems and as backup relays to distance and differential in High voltage interconnected transmission and sub-transmission system.

Over current Relays are categorized as Instantaneous, definite time and inverse time relays. Modern numerical relays from famous manufacturers like ABB, Areva, GE, Siemens etc has minimum three stages of Protection. Stage 1 & 2 shall be either Inverse curve or Definite time whereas Stage 3 is Instantaneous without any time delay. In addition these relays have additional feature of multiple setting depending the digital input to the relay which may corresponds to particular topology of grid conditions. In addition these relays have inrush or starting multipliers which may be effectively used to prevent the mal-operation of relays during motor starting or transformer charging. In addition to conventional curves such as Normal Inverse (NI), Very Inverse (VI), Extremely Inverse (EI), Long Time Inverse (LTI), Standard Inverse (SI) etc. relays also have the feature of developing user defined curves based on the user requirements. All these features available in the modern relay are effectively utilized with sophisticated software program to reduce the fault clearing time and prevent the nuisance tripping of the relays[2],[3].

II. OVERCURRENT RELAYS COORDINATION

CT Selection:

Proper selection and sizing of Current Transformers are first important step in overcurrent relay coordination. [1]proposes full adaptive technique to optimal coordination of relays, however the CT ratio selected is not correct. CT ratio should be selected

International Journal of Engineering Research and General Science Volume 4, Issue 3, May-June, 2016
ISSN 2091-2730

Overcurrent and Earth-fault Relay Coordination for Microgrids with Modern Numerical Relay Features

Dr.R.Mayne Kumar[1] and Mr.V.Vidya[2]

[1]Associate Professor, Department of EEE, Shree Venkateshwara Hi-Tech Engineering College, Erode, India

[2]PG Scholar, M.E-(PSE),Department of EEE, Shree Venkateshwara Hi-Tech Engineering College, Erode, India

Abstract - Capability of Microgrids to operate in both grid connected mode and islanded mode results in drastic change in the fault current results in complicated protection requirements. This paper proposes a new approach for solving all overcurrent (OC) relays and Earth fault relays in subsystems, protection zones with cooperation, distributed generation system, with Embedded Renewable Generation and more grid using modern numerical relay features. This approach is more suitable where there is a drastic change in the fault current based on the network topology and configuration. This technique is used in setting the OC relays of a IEEE 30 Bus system. Real time steel industry and a Microgrid system. There is a significant reduction in fault clearing time which reduces the damage and enhances the stability. In addition it also prevent all the mal operation of relays and unknown trips.

Index Terms - Micro Grid, Relay Setting, Numerical Relays with Multiple settings, Adaptive setting, self-tuning relays, Cooperation

I. INTRODUCTION

Conventionally Over Current (OC) relay settings are provided based on full load current of power system components. Time Dial Setting (TDS) and Type of curve are chosen to ensure that the coordination with the downstream relays. This conventional procedure for setting the relays work well for a long time. However introduction of Embedded Renewable Generation, Cogeneration in plants in process industries and islanding from the grids, interconnection of micro grids, Change in the Grid Topology, etc. results in the circuit-fault currents in the subsystem. This leads to problems like unwanted tripping of relays, improper coordination or longer time taken to operate the relays for a fault. Situation get worse in the continuous, sudden-of renewable generation, most sophisticated grid islanding schemes. Energy efficient devices which drawn high starting current, technological advancements in controlled switching for transformer and motor to reduce the inrush current etc made the conventional of relay setting obsolete. These technological advancements along with new features in the modern numerical relays provide a better platform to coordinate the relays to reduce the operating time of relay, prevent the unknown tripping and ensure the coordination between the relays in all the grid topologies[1].

Overcurrent Relays utilized in power system protection as economical protective devices. Overcurrent relays are used as main protection devices in Low Voltage Radial systems and as backup relays to distance and differential in High voltage interconnected transmission and sub-transmission system.

Over current Relays are categorized as instantaneous, definite time and inverse time relays. Modern numerical relays from various manufacturers like ABB, Areva, GE, Siemens etc has minimum three stages of Protection, stage 1 & 2 shall be either inverse curve or Definite time where Stage 3 is instantaneous without any time delay. In addition these relays have additional feature of multiple setting depending the digital input to the relay which may correspond to position or topology of grid conditions. In addition these relays have inrush or starting multipliers which may be effectively used to prevent the mal operation of relays during motor starting or transformer charging. In addition to conventional curves such as Normal Inverse (NI), Very Inverse (VI), Extremely Inverse (EI), Long Time Inverse (LTI), Standard Inverse (SI) etc. relays also have the feature of user defined curves based on the user requirements. All these features available in the modern relay are effectively utilized with sophisticated software program to reduce the fault clearing time and prevent the unknown tripping of the relays[2],[3].

II. OVERCURRENT RELAYS COORDINATION

2.1 Selection

Proper selection and placing of Current Transformers are first step taken step in overcurrent relay coordination. Typically one 1-0 adjustable Relay is optimal one distribution of relays, however the CT may vary based on non current. CT turns should be selected so

based on the Full load current of component with the overload margin. However the Primary CT rating is less than the full load current of the components in many Cases [1] - [2]

Stage : 1/2 (Inverse Definite Minimum Time Delay – IDMT Relay – 51)

a. Pickup up setting or Plug Setting

Plug setting for inverse relays shall be selected based on the maximum possible load current and over load margin. In HV substation this depends on the worst case power-flow current with some future margin.

b. Time Dial Setting (TDS) or Time Multiplier Setting (TMS)

Choosing TDS is more involved task which provides the necessary coordination with downstream relays[6]–[8]. This depends on many factors including maximum fault current, minimum fault cureent, Starting Current, Inrush Current, Through fault current, Type of curve selected etc.,

c. Curve Selection:

Selection of curve for the relay is also involved task. Conventionally Normal Inverse or Stand Inverse is selected for plain feeders and Extremely Inverse is used for Transformer Feeders and Motor Feeders.

Stage : 2 (Definite Time Delay – DT Relay – 50)

a. Pickup up setting or Plug Setting

Plug setting for Definite Time relays depends upon whether time discrimination is adopted or not. If time discrimination is not used i.e Definite Time is set as minimum time then the pickup setting shall be higher than the starting or inrush or through fault current. However present modern numerical relays provides many options related to starting and inrush and hence pickup setting can be lowered in normal operating condition which reduces the damage. i.e Even when there is fault with minimum short circuit current this options enable to fall in the Definite Time region of the relay characteristics which falls in Inverse characteristics of the relay in conventional setting. This result in significant reduction of fault clearing time and hence the damage.

b. Time Setting (TS)

Proper Time discrimination is used if the relay is used to coordinate with the downstream relays. Otherwise the minimum time delay available in the relay has been used.

Stage : 3 (Instantaneous stage – 50)

a. Pickup up setting

Pickup setting shall be higher than the starting or inrush or through fault current. However present modern numerical relays provides many options related to starting and inrush and hence pickup setting can be lowered in normal operating condition which reduces the damage. i.e Even when there is fault with minimum short circuit current this options enable to fall in the instantenous region of the relay characteristics which falls in Inverse characteristics of the relay in conventional setting. This result in significant reduction of fault clearing time and hence the damage [4].

Earth fault settings also Similar to the overcurrent relay setting except the below facts

a. Plug settings are based on the unbalanced current in residual connected type current transformers and minimum possible setting shall be adopted in Core Balancing Current Transformers

International Journal of Engineering Research and General Science Volume 4, Issue 3, May-June, 2016
ISSN 2091-2730

based on the Full load current of component with the overload margin. However the Primary CT rating is less than the full load current of the components in many Cases [1] - [2].

Stage : 1.2 (Inverse Definite Minimum Time-Delay – IDMT Relay - 51)

a. Pickup up setting or Plug Setting

Plug setting for inverse curves shall be selected based on the maximum possible load current and over load margin. In HV substation this depends on the worst case power-flow current with some future margin

b. Time Dial Setting (TDS) or Time Multiplier Setting (TMS)

Choosing TDS is more involved task which provides the necessary coordination with downstream relays[3] [8]. This depends on many factors including maximum fault current, minimum fault current, Starting Current, Inrush Current, Through load current, Type of curve selected etc.,

c. Curve Selection:

Selection of curve for the relay is also involved task. Conventionally Normal Inverse or Stand Inverse is selected for plain feeders and Extremely Inverse is used for Transformer Feeders and Motor Feeders.

Stage : 2 (Definite Time Delay – DT Relay – 50)

a. Picking up setting or Plug Setting

Plug setting for Definite Time relays depends upon whether time discrimination is adopted or not. If time discrimination is not used i.e. Definite Time is set as minimum time then the pickup setting shall be higher than the starting or inrush or through fault current. However present modern numerical relays provides many options related to starting and inrush and hence pickup setting can be lowered in normal operating condition which reduces the damage. i.e Even when there is fault with minimum short circuit current this options enable to fall in the Definite Time region of the relay characteristics which falls in Inverse characteristics of the relay in conventional setting. This result in significant reduction of fault clearing time and hence the damage.

b. Time Setting (TS)

Proper Time discrimination is used if the relay is used to coordinate with the downstream relays. Otherwise the minimum time delay available in the relay has been used.

Stage : 3 (Instantaneous stage – 50)

a. Picking up setting

Pickup setting shall be higher than the starting or inrush or through fault current. However present modern numerical relays provides many options related to starting and inrush and hence pickup setting can be lowered in normal operating condition which reduces the damage. i.e Even when there is fault with minimum short circuit current this options enable to fall in the instantaneous region of the relay characteristics which falls in Inverse characteristics of the relay in conventional setting. This result in significant reduction of fault clearing time and hence the damage [4].

Earth fault settings also Similar to the overcurrent relay setting except the below facts

a. Plug settings are based on the unbalanced current in residual connected type current transformers and minimum possible setting shall be selected in Core Balancing Current Transformer.

b. Earth fault current depends on the type of earthing (Solid, Resistance Earthed) and hence care shall be taken to ensure the fault current available.

c. Earth fault current also depends on the winding configuration. For an example of fault on the star side of the Delta – Star transformer, the same will not be reflected in the Delta side and hence the same need not be coordinated.

Relay Characteristic	Equation (IEC 60255)
Standard Inverse (SI)	$t = TMS \times \frac{0.14}{I_r^{0.02} - 1}$
Very Inverse (VI)	$t = TMS \times \frac{13.5}{I_r - 1}$
Extremely Inverse (EI)	$t = TMS \times \frac{80}{I_r^2 - 1}$
Long time standard earth fault	$t = TMS \times \frac{120}{I_r - 1}$

(a): Relay characteristics to IEC 60255

Grading Margin

The current and time settings selection shall start at the load end and worked back towards the power source. Grading margins between protection relays shall be typically as follows: The grading margin shall be 0.4 to 0.5s but can be reduced such that the total minimum time at any level does not exceed 2.5s. However as microprocessor based numerical relays are used. The grading margin considered is 0.25s to the extent possible [5], [6].

Grading Margin :

(Er1 + Er2 + Ect) x T/100 + Tcb + T0 +Ts

=(5 + 5 + 5) x 0.25/100 + 0.1 + 0.02 + 0.03

= 0.2175 = 0.25s

Where,

Er1, Er2 = Relay Timing Errors

Ect = CT Error

T = Nominal Operating time of relay nearest to the fault

Tcb = Circuit Breaker Opening time

T0 = Relay Overshoot time

Ts = Safety Margin

III. MODELING OF THE SYSTEM

IEEE 30 Bus system and Micro grid system are modeled based on the data available in the [9]. All power system components are modeled for steady state analysis. Nominal pi model is used for cables and transmission lines. Transformer are modeled with their leakage reactance. Generators are modeled with capability curve for load flow analysis and direct axis sub transient reactance for short circuit studies [7], [8].

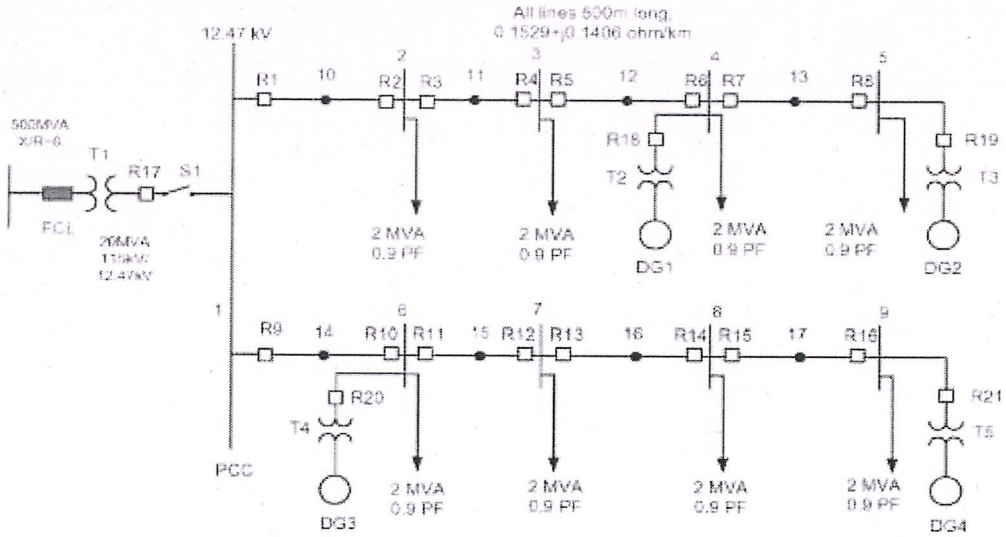

Fig 1 Single Line Diagram of Real Time Distribution System with Embedded Renewable generation

Distributed generation is modeled in two categories. One is based on the synchronous generator and other is based on the inverter based renewable resources their fault current is decided based on the power electronic switching capability. Modern numerical relays with all features are captures and modeled in detail which has not be done in any of the papers uptoauthors knowledge. Multi group setting, Analog and digital input, Multiplier settings during inrush and motor starting, communication with other relays etc are modeled in depth to find out the best possible solution. Change in the capacity of renewable resource and their impact on relay setting is also studied. 4 Nos of each 2 MVA is considered of base case which is increased to 3MVA, 4MVA and 5 MVA for subsequent cases. In addition different capacity renewables at different location also tried out.

IV. LOAD FLOW AND SHORT CIRCUIT STUDIES

Load flow analysis is performed to find out the maximum full load current at all branches which is the base for selecting the CT ratio and pickup setting Short Circuit study is carried out based on IEC 60909 with the C factor 1.0. Short Circuit study have been carried out with various operating conditions, Grid Topologies and With and Without Cogeneration, With cogeneration alone, with and Without Embeded Renewable Generation. There is significant change in the fault current in various cases. Maximum Fault Current, Minimum Fault Current and other significant case short circuit results alone indicated in the Table 1, 2 & 3

Table 1 Load Flow Results

	Without DG		With 2 MVA DG		Islanded mode operation	
Bus	Voltage in pu	Power in kW X 0.1	Voltage in pu	Power in kW X 0.1	Voltage in pu	Power in kW X 0.1
Bus 1	0.9564	146	0.98	-14.6	0.964	1.34
Bus 2	0.951	72.66	0.9793	-7.28	0.9645	1.34
Bus 3	0.9469	54.31	0.9799	-25.32	0.9657	-16.6
Bus 4	0.9442	36.11	0.9819	-43.2	0.9681	-34.7
Bus 5	0.9429	18.02	0.9829	-21.72	0.9693	-17.2
Bus 6	0.951	72.66	0.9795	-7.37	0.9649	-1.34
Bus 7	0.9469	54.31	0.978	14.34	0.9636	17.33

Fig 1 Single Line Diagram of Real Time Distribution System with Renewable Renewable generation

Distributed generation is modelled in two categories. One is based on the synchronous generator and other is based on the inverter based renewable resources their fault current is decided based on the power electronic switching capability. Modern numerical relays with all features are captured and modelled in detail which has not done in any of the papers optimalbore knowledge. Multi group setting, Analog and digital input, Multiplier settings during inrush and motor starting, communication with other relays etc are modelled in depth to find out the best possible solution. Change in the capacity of renewable resources and their impact on relay setting is also studied. A Mva of each 2 MVA is considered of base case which is increased to 2MVA, 4MVA and 5 MVA for subsequent cases. In addition different capacity renewables at different location also tried out.

IV. LOAD FLOW AND SHORT CIRCUIT STUDIES

Load flow analysis is performed to find out the maximum full load current at all junctions which is the base for selecting the CT ratio and pickup setting. Short Circuit study is carried out based on IEC 60909 with the C Factor 1.0. Short Circuit study have been carried out with various operating conditions, Grid Topologies non With and Without Cogeneration, With cogeneration alone, with and Without Embedded Renewable Generation. There is significant change in the fault current in various cases. Maximum Fault Current, Minimum Fault Current and other significant case short circuit results alone indicated in the Table 1, 2 & 3.

Table 1 Load Flow Results

	Without DG				With 2 MVA DG		Islanded mode operation	
Bus	Voltage in pu	Power in kW X 0.1	Voltage in pu	Power in kW X 0.1	Voltage in pu	Power in kW X 0.1
Bus 1	0.9754	146	0.98	-14.6	0.994	1.34
Bus 2	0.931	22.66	0.9793	-3.28	0.9845	1.34
Bus 3	0.9469	54.31	0.9799	-25.32	0.9857	-10.6
Bus 4	0.9842	36.11	0.9819	-43.2	0.9851	-34.7
Bus 5	0.9126	18.02	0.9829	-31.72	0.9893	-17.3
Bus 6	0.931	22.66	0.9793	-3.27	0.9846	1.33
Bus 7	0.9469	54.31	0.9798	1.31	0.9856	12.31

Bus 8	0.9442	36.11	0.9778	-3.69	0.9637	-0.68
Bus 9	0.9429	18.02	0.9789	-21.71	0.9651	-18.71
Grid	1.00	-	1.00		-	-

Table 2Short Circuit results

	Without DG		With 2 MVA DG		Islanded mode operation	
Bus	Symmetrical Fault Current	Peak Current	Symmetrical Fault Current	Peak Current	Symmetrical Fault Current	Peak Current
Bus 1	7.2	14.3	10.9	23	2.8	7.2
Bus 2	6.7	13.8	10.2	22.7	2.8	7.1
Bus 3	6.3	13.2	9.5	19.8	2.9	7.2
Bus 4	5.9	12.6	8.9	19.6	2.9	7.3
Bus 5	5.5	11.4	8.3	17.8	2.9	7.5
Bus 6	6.7	13.8	10.2	22.2	2.8	7.2
Bus 7	6.3	13.2	9.4	20.4	2.7	7.2
Bus 8	5.9	12.6	8.6	19.1	2.6	7.0
Bus 9	5.5	11.4	8.0	17.5	2.6	6.9
Grid	2.5	5.6	2.8	6.3	-	-

V. CONCLUSION

New approach of modeling numerical rela features provide significant advantage over the conventional way of relay settings. This technique is more suitable where there is a drastic change in the fault current based on the network topology and configuration. This technique is verified for setting the OC relays in IEEE 30 Bus system, Real time steel industry and a micro grid. There is a significant reduction in fault clearing time which reduces the damage and enhance the stability. In addition it also prevent all the mal operation of relays and nuisance tripping. Based on the above conclusions it is recommended to review all the relay settings of existing system while retrofitting or Annual maintenance.

REFERENCES:

[1] A. J. Urdaneta, L. G. Pérez, J. F. Gómez, B. Feijoo, and M. González, "Implementation of Full Adaptive Technique to Optimal Coordination of Overcurrent Relays" ," Elect.Power Energy Syst., vol. 23, pp. 819–825, 2000.

[2] PukarMahat,BirgitteBak-Jensen,ClausLethBak,"A Simple Adaptive Overcurrent Protection of Distribution Systems With Distributed Generation,"IEEE TRANSACTIONS ON SMART GRID., VOL. 2, NO. 3, SEPTEMBER 2011.

[3] A. J. Urdaneta, L. G. Perez, and H. Restrepo, "Optimal coordinationof directional overcurrent relays considering dynamic changes inthe network topology," IEEE Trans. Power Del., vol. 12, no. 4, pp.1458–1464, Oct. 1997.

Bus 8	0.9443	26.11	0.9724	-3.89	0.9943	-0.68
Bus 9	0.9429	18.02	0.9789	-21.21	0.9951	-18.21
Grid	1.00	-	1.00	-	-	-

Table 2 Show (Cb wi results

Fdr	Without DG			With 2 MW A DG		Islanded mode operation	
	Symmetrical Fault Current	Pick Current	Symmetrical Fault Current	Pick Current	Symmetrical Fault Current	Pick Current
Bus 1	7.2	14.4	16.9	33.7	3.8	7.2
Bus 2	6.7	13.4	16.2	32.3	2.8	5.1
Bus 3	6.3	12.2	8.5	17.8	3.9	7.2
Bus 4	5.9	12.6	8.9	17.8	2.6	7.2
Bus 5	5.5	11.2	5.7	11.8	2.9	5.5
Bus 6	6.7	13.3	10.2	22.2	2.8	7.2
Bus 7	6.1	12.2	5.4	20.4	2.7	5.2
Bus 8	5.9	12.6	8.6	16.1	2.5	7.0
Bus 9	5.5	11.4	5.0	17.5	1.6	6.9
Grid	2.5	5.6	2.8	6.2	-	-

V. CONCLUSION

New approach of modeling numerical rele features possible significant advantage over the conventional way of relay setting. This technique is more suitable where there is a drastic change in the fault current based on the network topology and configuration. This technique is verified for setting the OC relays in IEEE 30 Bus system, Real time steel industry and a micro grid. There is a significant reduction in fault clearing time which reduces the damage and enhance the stability. In addition it also prevent all the mal operation of relays and nuisance tripping. Based on the above conclusions it is recommended to review all the relay settings of existing system while monitoring or Annual maintenance.

REFERENCES

[1] A. A. Ademola, L. C. Peter, I. E. Odunze, B. Felix, and M. Gabriel, "Implementation of Fuzzy Adaptive Technique to Optimal Coordination of Overcurrent Relays," Int. J. Power Energy Syst., vol. 2, pp. 219–224, 2008.

[2] Tukomdin Bingnitch-Kheng, "Fuzzy adaptive Overcurrent Relay Coordination," Fuzzy Sets and Systems, vol. 24, pp. 1–9, 1987.

[3] A. A. Ademola, L. C. Peter, and H. Kerstens, "Optimal coordination of overcurrent relays using genetic algorithm," IEEE Trans. Power Del., vol. 22, no. 2, pp. 1394–1400, 2007.

[4] "The Electricity Training Association," in Power System Protection.New Delhi, India: Shankar's Book Agency PVT. Ltd., 2010, vol. 2,First Indian Reprint.

[5] A. Y. Abdelaziz, H. E. A. Talaat, A. I. Nosseir, and A. A.Hajjar, "Anadaptive protection scheme for optimal coordination of overcurrent re-lays," Elect. Power Syst. Res., vol. 61, no. 1, pp. 1–9, 2002.

[6] A. S. Noghabi, J. Sadeh, and H. R. Mashhadi, "Consideringdifferentnetwork topologies in optimal overcurrent relay coordination using ahybrid GA," IEEE Trans. Power Del., vol. 24, no. 4, pp. 1857–1863,Oct. 2009.

[7] A. S. Noghabi, J. Sadeh, and H. R. Mashhadi, "Optimal coordination ofdirectional overcurrent relays considering different network topologiesusing interval linear programming," IEEE Trans. Power Del., vol. 25,no. 3, pp. 1348–1854, Jul. 2010.

[8] A. J. Urdaneta, L. G. Pérez, J. F. Gómez, B. Feijoo, and M. González,"Presolve analysis and interior point solutions of the linear program-ming coordination problem of directional overcurrent relays," Elect.Power Energy Syst., vol. 23, pp. 819–825, 2000.

[9] Walled K A, Najay H, Zeineldin "Optimal Protection coordination for Microgrids with Grid connected and islanded capability", IEEE Transactions on industrial electronics, Vol 60, No 4 April 2013

[4] "The Electricity Training Association," in Power System Protection, New Delhi, India: Sharma's Book Agency, PVT. Ltd., 2010, vol. 2, First Indian Reprint.

[5] A. Y. Abdelaziz, H. E. A. Talaat, A. I. Nosseir, and A. A. Hajjar, "Adaptive protection scheme for optimal coordination of overcurrent relays," Elect. Power Syst. Res., vol. 61, no. 1, pp. 1–9, 2002.

[6] A. S. Noghabi, J. Sadeh, and H. R. Mashhadi, "Considering differentiaprotection topologies in optimal overcurrent relay coordination using hybrid GA," IEEE Trans. Power Del., vol. 24, no. 4, pp. 1857–1863, Oct. 2009.

[7] A. S. Noghabi, J. Sadeh, and H. R. Mashhadi, "Optimal coordination of directional overcurrent relays considering different network topologies using interval linear programming," IEEE Trans. Power Del., vol. 25, no. 3, pp. 1348–1354, Jul. 2010.

[8] A. J. Urdaneta, L. G. Pérez, J. F. Gomez, B. Feijoo, and M. González, "Presolve analysis and interior point solutions of the linear programming coordination problem of directional overcurrent relays," Elect. Power Energy Syst., vol. 21, pp. 317–325, 2000.

[9] Wanke K. A., Nasu H., Zengelein "Optimal Protection coordination for Microgrids with Grid connected and islanded capability," IEEE Transactions on industrial electronics, Vol 60, No.4 April 2013.

iosrjournals.org/iosr-jeee.html

IOSR Journal List

IOSR Journal of Computer Engineering (IOSR-JEEE)

- Submit Paper
- Editorial Board
- Current Issue
- IOSR-JEEE Archive
- Special Issue Archive

- IOSR Journal of Computer Engineering
- IOSR Journal of Mechanical and Civil Engineering
- IOSR Journal of Electronics and Communication Engineering
- IOSR Journal of VLSI and Signal Processing
- IOSR Journal on Mobile

IOSR Journal of Electrical and Electronics Engineering (IOSR-JEEE)

About | List of Topics | Call For Paper | Global Statistics

Executive Editor	: Dr. Aetes Haroeri, Egypt
e-ISSN	: 2278-1676
p-ISSN	: 2320-3331
Publication Frequency	: 6 Issue per Year
Publisher	: International Organization Of Scientific Research (IOSR)
Paper Submission id	: jeee@iosrmail.org

IOSR Journal of Electrical and Electronics Engineering(IOSR-JEEE) is a double blind peer reviewed International Journal that provides rapid publication (within a month) of articles in all areas of electrical and electronics engineering and its applications. The journal welcomes publications of high quality papers on theoretical developments and practical applications in electrical and electronics engineering. Original research papers, state-of-the-art reviews, and high quality

Start 10:06 AM 02-01-2021

iosrjournals.org/iosr-jeee/pages/v6i4.html

IOSR-JEEE VOLUME-6 ~ ISSUE-4

Find Journal | Submit Now

10 Indexing Services | **600** Conference Published | **1200+ Eminent** Faculty | **1800+** Editorial Team

IOSR Journal List

IOSR Journal of Electrical and Electronics Engineering (IOSR-JEEE)

- Submit Paper
- Editorial Board
- Current Issue

Volume-6 ~ Issue-4

Citation | Abstract | Reference | Full PDF

Paper Type	: Research Paper
Title	: Natural Gas Compressibility Factor Correlation Evaluation for Niger Delta Gas Fields
Country	: Nigeria
Authors	: Obuba, J., Ikiesnkimama, S. S., Ubani, C. E., Ekeke, I. C.
doi	: 10.9790/1676-0640110

Start 10:05 AM 02-01-2021

iosrjournals.org/iosr-jeee/pages/v6i4.html

Apps Muthukumar Shared -

- IOSR Journal of Nursing and Health Science (IOSR-JNHS)
- IOSR Journal of Agriculture and Veterinary Science (IOSR-JAVS)
- IOSR Journal of Sports and Physical Education (IOSR-JSPE)
- IOSR Journal of Biotechnology and Biochemistry (IOSR-JBB)
- IOSR Journal of Applied Geology and Geophysics (IOSR-JAGG)
- IOSR Journal of Environmental Science, Toxicology and Food Technology (IOSR-JESTFT)
- IOSR Journal of Applied Physics (IOSR-JAP)
- IOSR Journal of Applied Chemistry (IOSR-JAC)

Paper Type	Research Paper
Title	Modified three phase Unified Power Quality Conditioner with capacitor midpoint topology
Country	India
Authors	Ganeshkumar A
doi	**10.9790/1676-0644854** crossref

Downloads : Times

Citation | Abstract | Reference | Full PDF

Paper Type	Research Paper
Title	A Fuzzy Logic controller based Multifunctional Dynamic Voltage restorer in Distribution System
Country	India
Authors	M Divya Vani, Md Asif, D Shobha Rani, B Ramu, P Harika
doi	**10.9790/1676-0645563** crossref

Downloads : Times

Citation | Abstract | Reference | Full PDF

Paper Type	Research Paper
Title	Capacitor Placement and Reconfiguration of Distribution System with hybrid Fuzzy-Opposition based Differential Evolution Algorithm
Country	India
Authors	R. Muthu Kumar, Dr. K. Thanushkodi
doi	**10.9790/1676-0646469** crossref

Downloads : Times

Citation | Abstract | Reference | Full PDF

Paper Type	Research Paper
Title	Design and Implementation of Model Reference Adaptive Controller using Coefficient Diagram Method for a nonlinear process

Start 10:04 AM 02-01-2021